NPM Nippon Pulse
Your Partner in Motion Control

Tin-Can Steppers
Gearhead Specs
PF(C)25

Dimensions of Geared Model

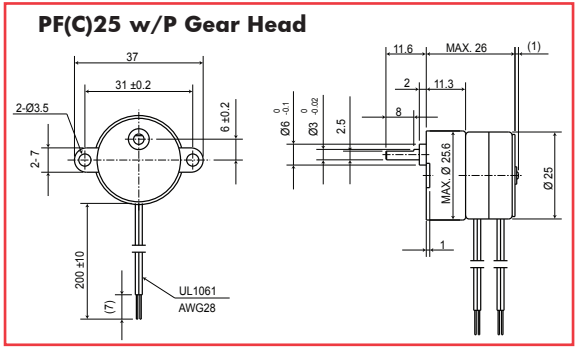

Ratios of Geared Model

Gear Ratio	6/25	1/5	3/25	1/10	2/25	1/15	3/50	1/20
Maximum Torque	20mN·m				50mN·m			

Gear Ratio	1/25	1/30	1/50	1/60	1/75
Maximum Torque	70mN·m				

Gear Ratio	1/100	1/120	1/125	1/150	1/200	1/250	1/300	1/20
Maximum Torque	100mN·m							